US - A-29122 KPP

Sipariş Kodu: **A-3079-286**

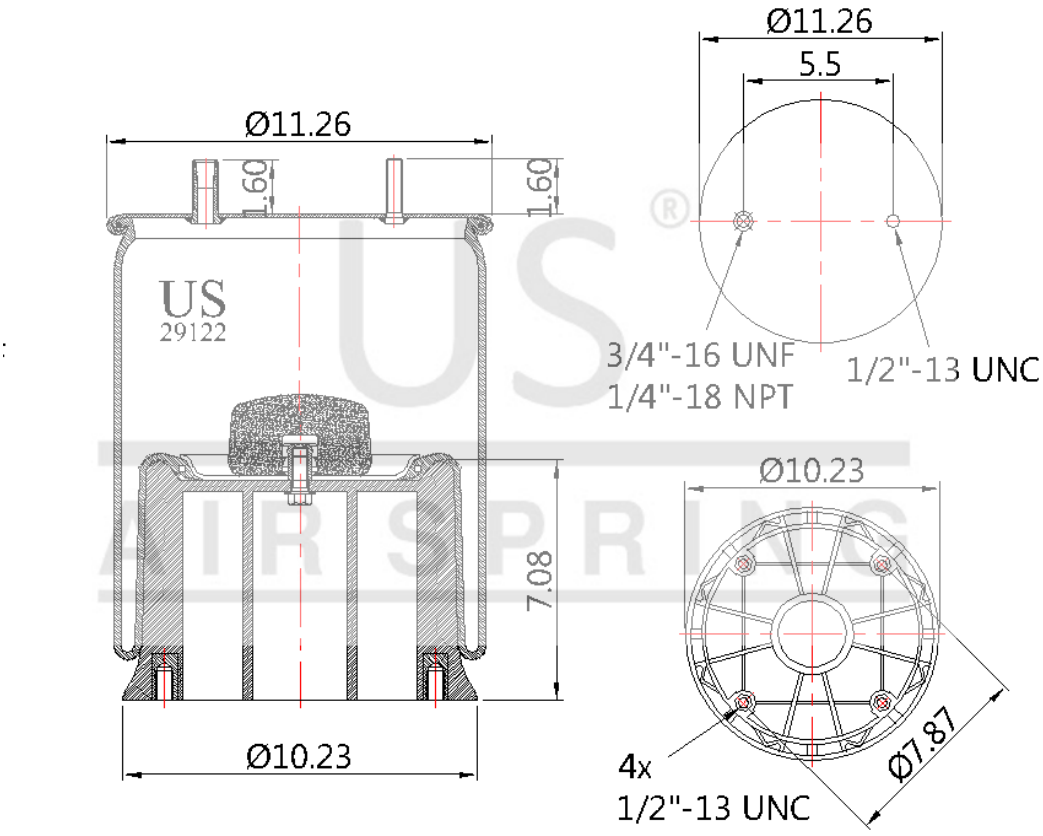

© 2026 US AIR SPRING. ALL RIGHTS RESERVED. http://www.usmerkaucuk.com/

Ürün Özellikleri

Ürün Tipi	KPP
Ürün Kodu	A-29122 KPP
Sipariş Kodu	A-3079-286
Kutu Boyutu	
Kutudaki Adet	
Ağırlık	10 Kg.
Tork	
Ürün Grubu	

US - A-29122 KPP

Sipariş Kodu: **A-3079-286**

CROSS Kodları

CONTITECH	1110521A313
AIRTECH	381305KPP
FIRESTONE	W013589122
FIRESTONE	W013588792
FLEETPRIDE	AS9122
GOODYEAR	1R14045
GOODYEAR	1R13038
TAURUS	6366
TRIANGLE	AS8313
TRP	AS91220
AUTOMANN	1D28C9122
VIBRACOUSTIC	V1D28C9122

OEM Kodları

HENDRICKSON	365142
HENDRICKSON	365148
HENDRICKSON	3651410
HENDRICKSON	C22173
HENDRICKSON	S3830
SAF HOLLAND	90554043
VOLVO	3130500
FLEETRITE	1R13246
NEWAY	90557020
NEWAY	90557076
NEWAY	90557077
NAVISTAR	1681748C1
REYCO	1288302
TEC	506003
GRANNING	6394
RIDEWELL	S3053C
LOADGUARD	SC2041
NAVISTAR	554772C1
SAF HOLLAND	AR12151G
SAF HOLLAND	90557071
SAF HOLLAND	90557077
SAUER	P50732
DAYTON	3529122
EVELEY	RA19544
HENDRICKSON	S12514010
HENDRICKSON	S12514008
HENDRICKSON	S12437
HENDRICKSON	S3467
LOADGUARD	SC2098
FLEETRITE	1681748C1
RIDEWLL	1003589122C
SAF HOLLAND	90557185
TAURUS	AS6229122
VOLVO	85101163
WATSON&CHA.	AS0023